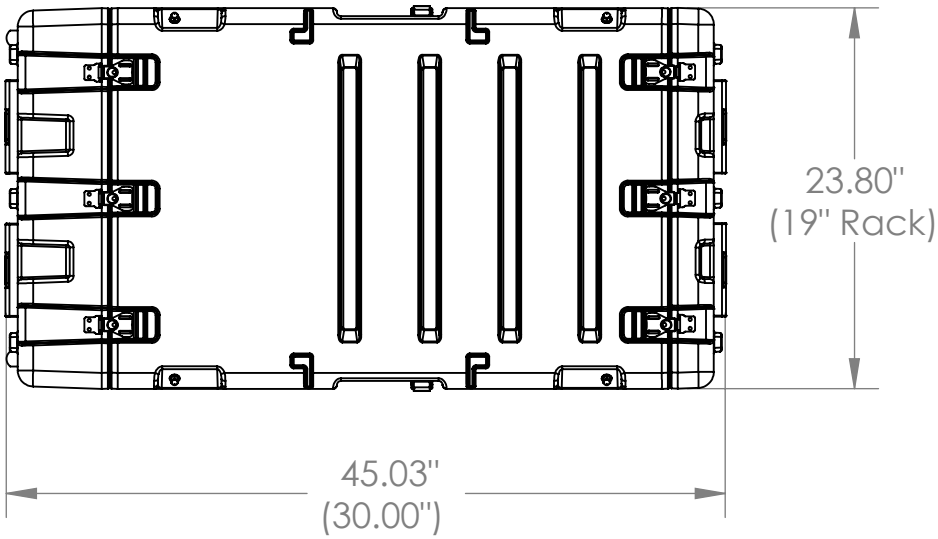

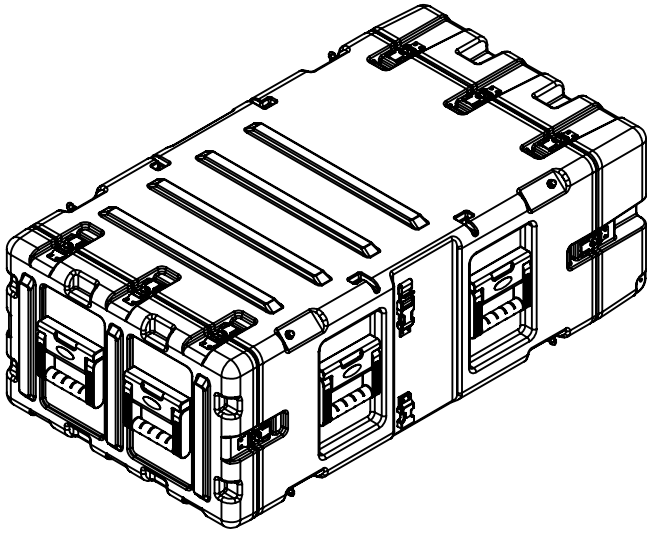

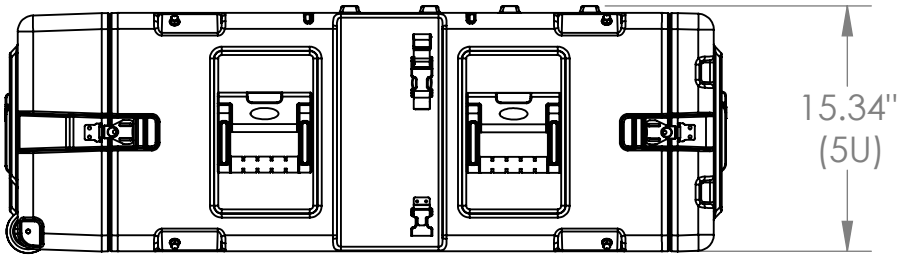

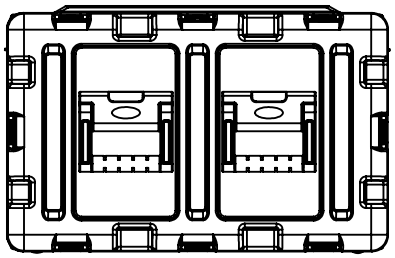

3RR-5U30-25

NOTE: DIMENSIONS IN (X.XX) ARE ID

434 West Levers Place
Orange, CA 92867
Phone: (714) 637-1252
Fax: (714) 637-0491
http://www.skbcases.com

This drawing and all information details are the sole property of SKB Corporation, Orange CA. Any unauthorized use will be punished to the full extent of the law.

Case Series:	RR Series	Dimensions (for reference only)				
Case part#	3RR-5U30-25		Length	Width	Overall	Base / Lid
			left to right	front to back	height	height
Weight:		Exterior	45.03"	23.80"	15.34"	NA
		Inerior	30.00"	19" Rack	5U	NA

5 4 3 2 1